DETAIL OF SUPPORT LUG.

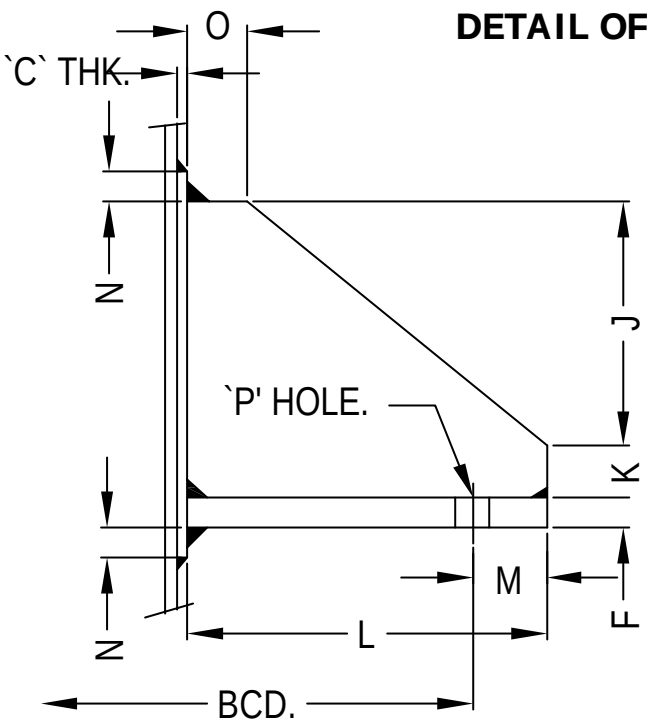

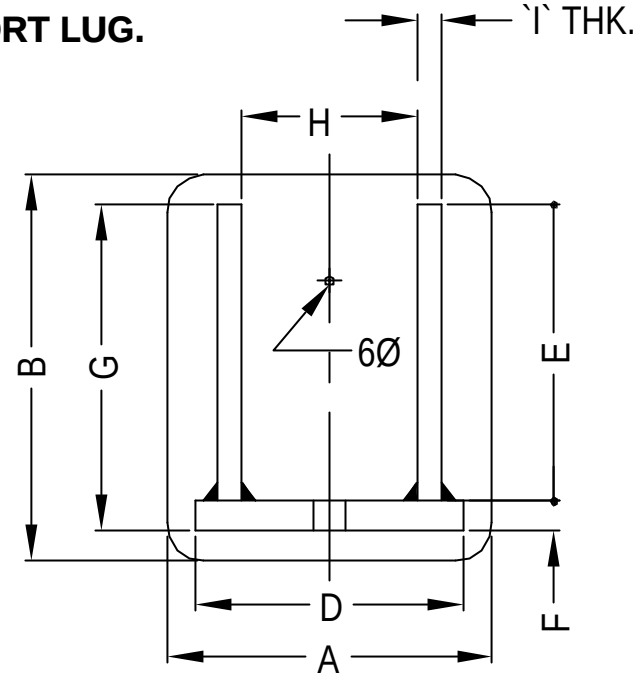

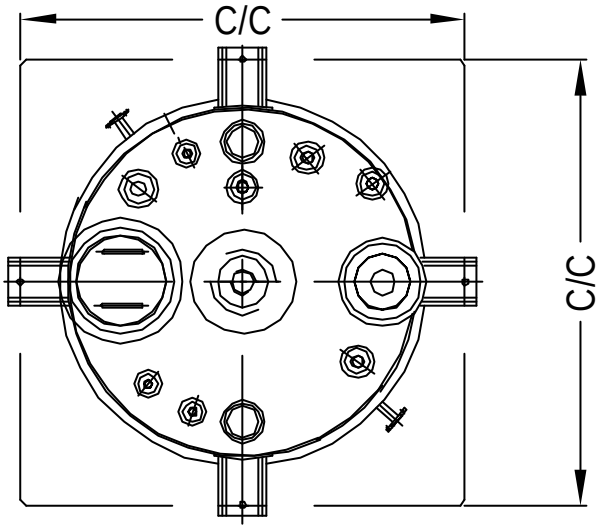

FOUNDATION DETAIL

CAPACITY	C/C
1000	
1500	
2000	
2500	
3000	
3500	
4000	
5000	
6000	
7000	
8000	
9000	
10,000	
12,000	

CAPACITY	A	B	C	D	E	F	G	H	I	J	K	L	M	N	O	P	Q	R	S
1000																			
1500																			
2000																			
2500																			
3000																			
3500																			
4000																			
5000																			
6000																			
7000																			
8000																			
9000																			
10,000																			
12,000																			